PUREGUARD DISPOSABLE MOPPING SYSTEM

CONTENTS

ZERO CAMPAIGN	**01**
INTRODUCTION	**02**
ROTATIONAL CLEANING AND DISINFECTION	**03**
ANNEX 1 REQUIREMENTS	03
DELTA NEUTRAL DETERGENT	04
PUREGUARD MOPPING SYSTEM	**05**
MOPS	06
HARDWARE	07
HOW TO ASSEMBLE THE CLEANROOM TROLLEY	08
HOW TO SET UP THE CLEANROOM TROLLEY	10
HOW TO ATTACH THE MOP	11
HOW TO MOP A CLEANROOM	12

PUREGUARD MOPPING SYSTEM

CREATED TO SIMPLIFY CONTAMINATION CONTROL

ZERO

- LIQUID HANDLING
- LIQUID WASTE
- WAITING TIME
- HANDLING OF THE MOP SURFACE

INTRODUCTION

PUREGUARD DISPOSABLE MOPPING SYSTEM

The Micronclean PureGuard disposable mopping system is designed for cleanroom use up to ISO 14644 Class 4, GMP Grade A or B. The system has been designed for ease of use and eliminates the need for

- mixing of chemicals within the cleanroom,
- waiting time within the cleanroom,
- disposal of waste fluids from within the cleanroom and
- the need to disinfect buckets and wringers, which are difficult to clean and sterilise.

In addition, the two-pocket design of the mop enables a hands free and secure connection to the mop frame without the need to handle the mop surface.

Our patented mop system is available in two forms these being:

- Individual mops which are ideally suited to cleanroom floors of less than 150m^2 and
- Multi packed mops which are targeted at cleanroom floors of more than 150m^2.

The Multi-packed mop option is designed around a mop trolley which features a patented mop pouch dispenser and provides the carrying capacity for both clean and dirty mops to cover the larger floor area.

The heart of the PureGuard system is the pre-saturated microfibre mops which are dosed to give up to 15m^2 coverage. The microfibre mops incorporate extremely low linting 'endless fibre' technology alongside batch manufacturing information to give absolute traceability.

The Micronclean system of pre-saturated mops is fully GMP compliant in that it supports the routine cleaning of the floor using Delta neutral detergent before the application of a rotational disinfection schedule incorporating Alpha and Beta disinfectants.

The Micronclean PureGuard microfibre mops are also available in a dry sterile condition.

ROTATIONAL CLEANING AND DISINFECTION

INTRODUCTION

The upcoming revision to EudraLex vol 4 covers Good Manufacturing Practice (GMP) guidelines and Annex 1 is specific to the manufacture of medicinal products. This update comes several years after since its last revision and provides direction to the industry, reflecting best practice.

For cleanroom cleaning and disinfection regimes the key part to note is that the draft guidelines clearly separate the cleaning step from the subsequent disinfection.

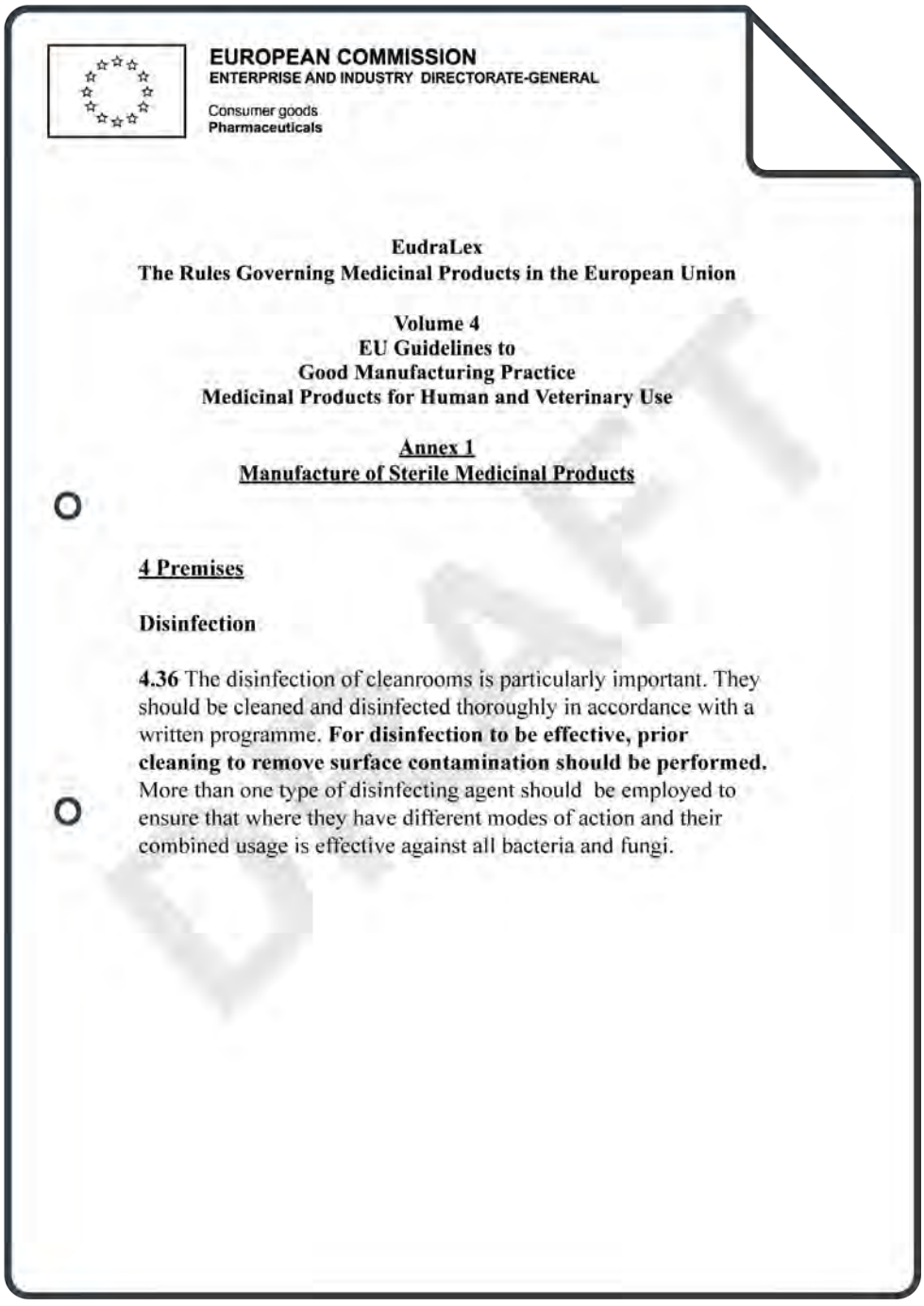

EUROPEAN COMMISSION
ENTERPRISE AND INDUSTRY DIRECTORATE-GENERAL

Consumer goods
Pharmaceuticals

EudraLex
The Rules Governing Medicinal Products in the European Union

Volume 4
EU Guidelines to
Good Manufacturing Practice
Medicinal Products for Human and Veterinary Use

Annex 1
Manufacture of Sterile Medicinal Products

4 Premises

Disinfection

4.36 The disinfection of cleanrooms is particularly important. They should be cleaned and disinfected thoroughly in accordance with a written programme. **For disinfection to be effective, prior cleaning to remove surface contamination should be performed.** More than one type of disinfecting agent should be employed to ensure that where they have different modes of action and their combined usage is effective against all bacteria and fungi.

ROTATIONAL CLEANING AND DISINFECTION

DELTA NEUTRAL DETERGENT

Microncleanhas recently brought to market a brand-new product Delta, which is a neutral detergent. Our Delta product has been developed to be fully compatible with our Alpha and Beta cleanroom disinfection regimes by having the following key features:

Low foaming formulation
this reduces the risk of streaks and staining when in use which could affect the subsequent disinfectant effectiveness.

Neutral (pH 6.5-7.5)
to ensure that it is non-corrosive and will not damage hard surfaces.

Supplied Pre-mixed and Dosed
to ensure a homogenous distribution of the active ingredient.

Manufactured with WFI
to ensure maximum cleanroom compatibility.

Gamma Irradiated
to give a sterile product with a two-year shelf life.

HOW TO USE

With our PureGuard Disposable mopping system, we would recommend the following regime to ensure the maximum benefit from our specially formulated detergent and disinfectants.

Week 1 | Clean the floor by using Delta Mops followed by disinfection using Alpha Mops.

Weeks 2 to 4 | As in Week 1 clean the floor by using Delta Mops followed by disinfection using Alpha Mops.

Week 5 | As in the previous week clean the floor using Delta Mops but then use a Beta Mop as the rotational disinfection step to prevent the potential buildup of resistance within your environment.

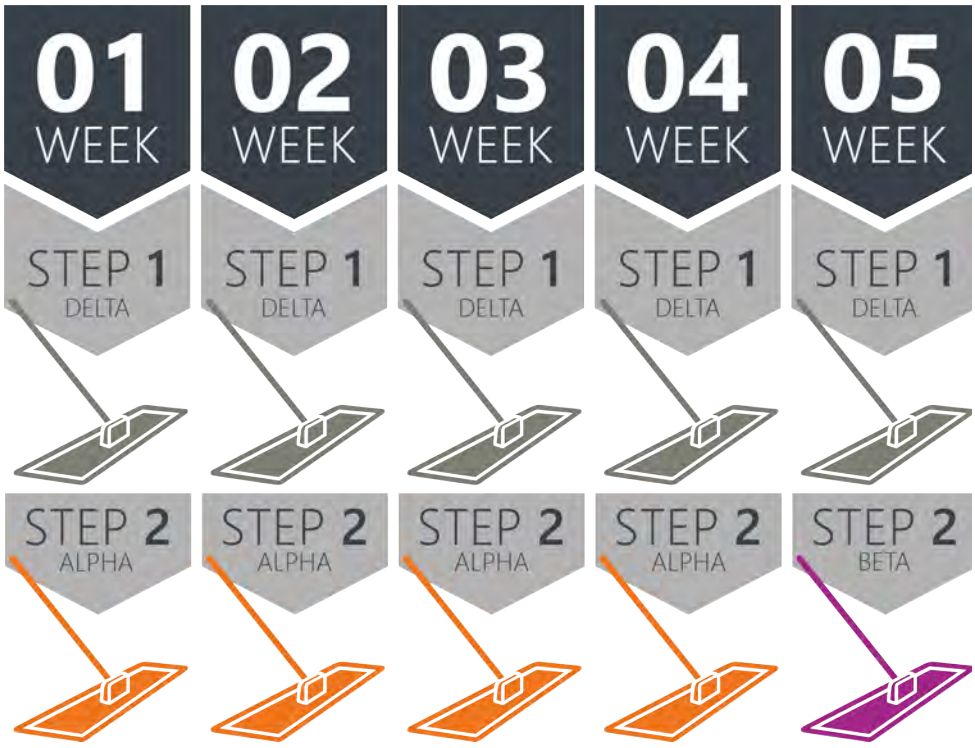

PUREGUARD MOPPING SYSTEM

PUREGUARD MOPPING SYSTEM
MOPS

PUREGUARD 1 AND 2 **IPA AND IMS MICROFIBRE MOP**
PUREGUARD 3, 4, 5 AND 6 **ALPHA, BETA, DELTA AND DRY MICROFIBRE MOP**

FEATURES
Dosed to achieve a uniform coverage of 15m^2. Proven 2 year shelf life.

Sterile Code	Family	Description	Size	Pack Qty	Case Qty
MSMI01016-A/I	PureGuard 1	IPA Multi Packed Disposable Microfibre Mop Sterile	440 x 140 mm	10	5 x 10
MSMI04016-A/I	PureGuard 1	IPA Individually Packed Disposable Microfibre Mop Sterile	440 x 140 mm	1	40 x 1
MSME01016-A/I	PureGuard 2	IMS Multi Packed Disposable Microfibre Mop Sterile	440 x 140 mm	10	5 x 10
MSME04016-A/I	PureGuard 2	IMS Individually Packed Disposable Microfibre Mop Sterile	440 x 140 mm	1	40 x 1
MSMA01016-A/I	PureGuard 4	Alpha Multi Packed Disposable Microfibre Mop Sterile	440 x 140 mm	10	5 x1 0
MSMA04016-A/I	PureGuard 4	Alpha Individually Packed Disposable Microfibre Mop Sterile	440 x 140 mm	1	40 x 1
MSMB01016-A/I	PureGuard 3	Beta Multi Packed Disposable Microfibre Mop Sterile	440 x 140 mm	10	5 x 10
MSMB04016-A/I	PureGuard 3	Beta Individually Packed Disposable Microfibre Mop Sterile	440 x 140 mm	1	40 x 1
MSMN01016	PureGuard 5	Delta Multi Packed Disposable Microfibre Mop Sterile	440 x 140 mm	10	5 x 10
MSMN04016	PureGuard 5	Delta Individually Packed Disposable Microfibre Mop Sterile	440 x 140 mm	1	40 x 1
MSMD01016	PureGuard 6	Dry Multi Packed Disposable Microfibre Mop Sterile	440 x 140 mm	10	5 x 10
MSMD04016	PureGuard 6	Dry Individually Packed Disposable Microfibre Mop Sterile	440 x 140 mm	1	40 x 1

PUREGUARD MOPPING SYSTEM
HARDWARE

PUREGUARD 7 AND 8
MOP HEADS, TROLLEY AND OTHER ACCESSORIES

Sterile Code	Family	Description	Size	Pack Qty	Case Qty
MTSS01001	PureGuard 7	Mop Trolley	One Size	EA	EA
MFSS01001	PureGuard 7	Lightweight Locking Mop Frame	One Size	EA	EA
MFSS79226	PureGuard 7	Stainless Steel Shrouded Mop Frame (with wing nut)	One Size	EA	EA
MHSS02001	PureGuard 7	PureGuard Stainless Steel Fixed Length Mop Handle (142cm)	One Size	EA	EA
MHSS02002	PureGuard 7	PureGuard Aluminium Adjustable Mop Handle Graphite Grey	One Size	EA	EA
BSP5C1010	PureGuard 8	Polyethylene Bag Sterile	One Size	10	10 x 10

Note: All PureGuard Hardware is fully fully autoclavable.

PUREGUARD MOPPING SYSTEM
HOW TO ASSEMBLE A CLEANROOM MOP TROLLEY

1 Contents

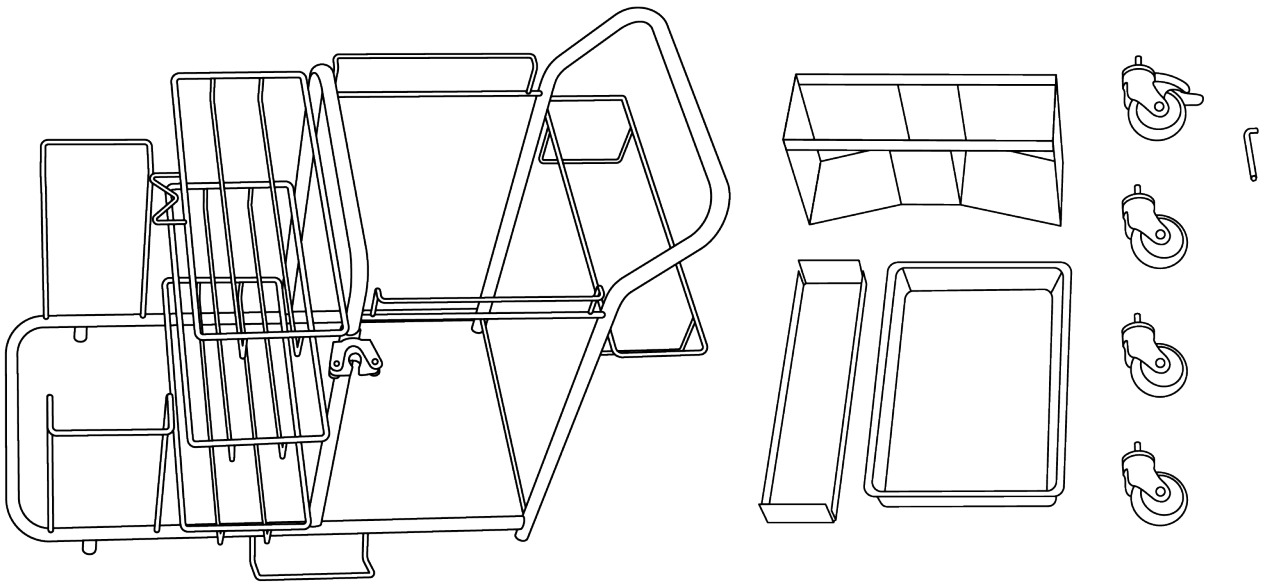

2 Attaching the wheels

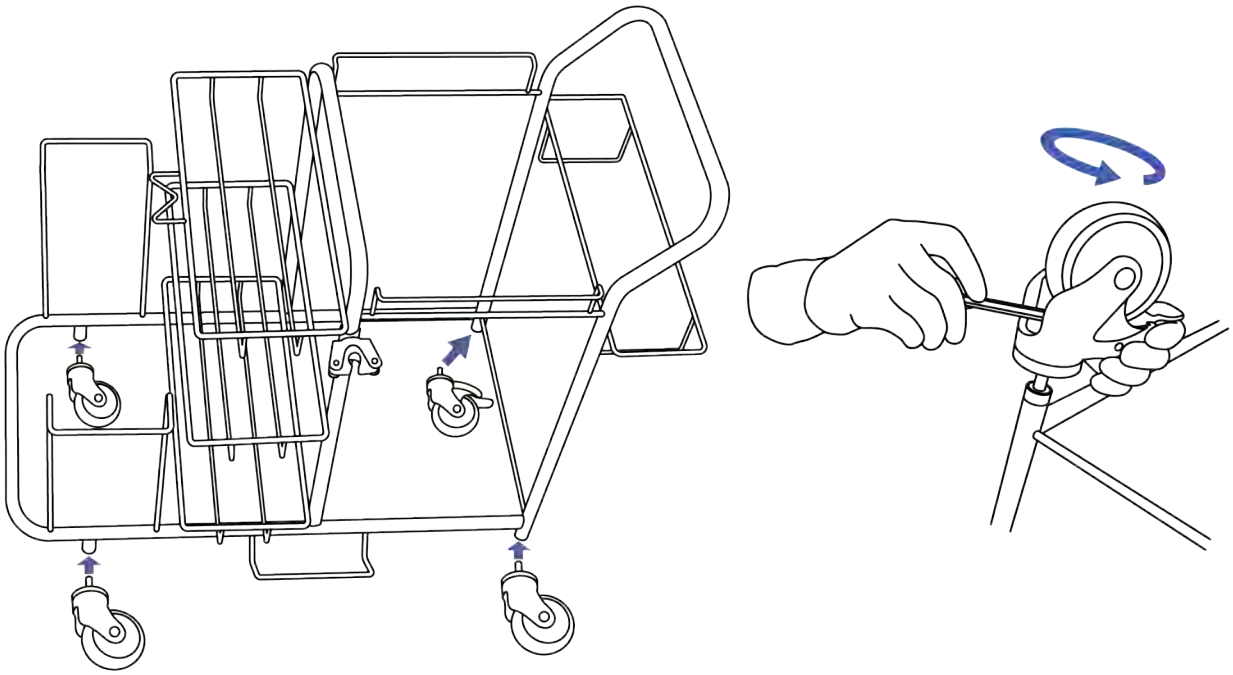

PUREGUARD MOPPING SYSTEM
HOW TO ASSEMBLE A CLEANROOM MOP TROLLEY

3 Positioning the pieces

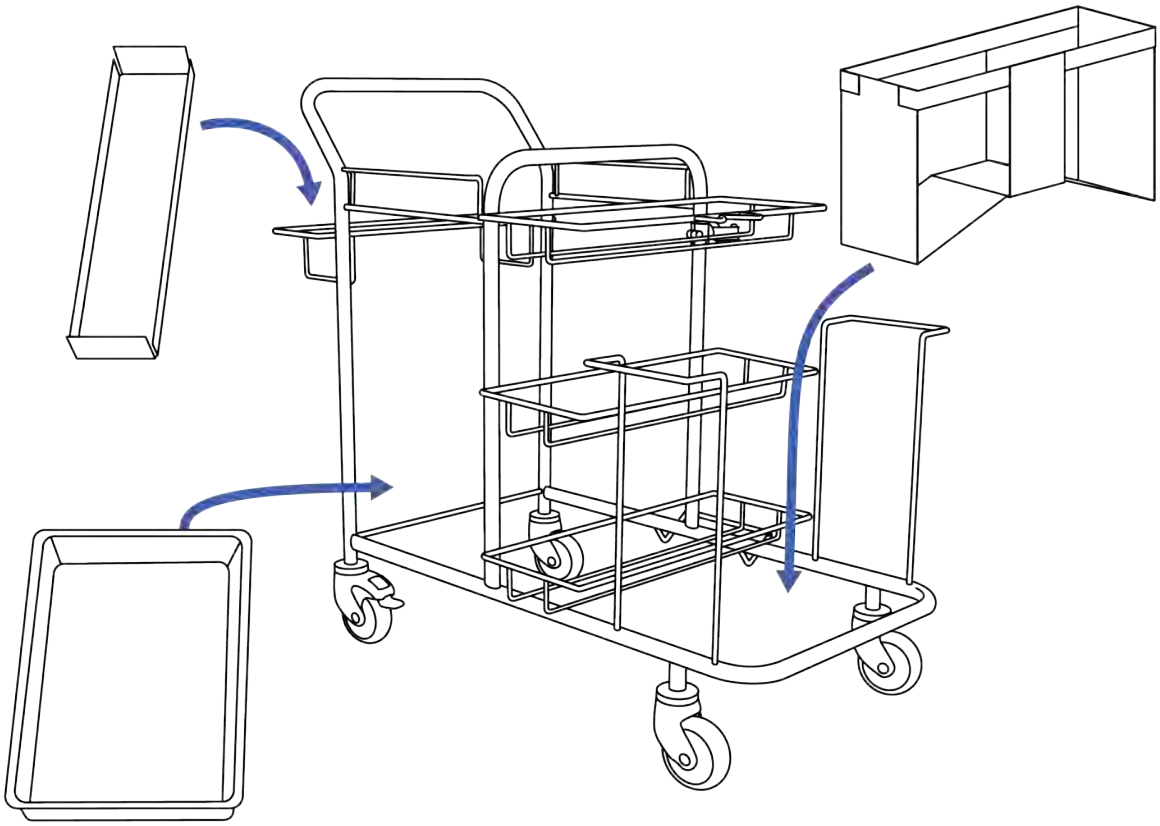

PUREGUARD MOPPING SYSTEM
HOW TO SET UP A CLEANROOM MOP TROLLEY

Ensure your waste plastic bag is correctly pulled over the wire frame. This is to dispose of the mops after use.

Tray stores trigger sprays and wipes which are also available from Micronclean.

Remove the outer bag of a sealed mop pack and insert into the dispenser attached to the trolley. Using the cleanroom cutter, open the mop bag. Stretch the bag over the sprung loaded dispenser.

Sealed mop pack storage. 3 open wire shelves with a capacity of 60 mops.

PUREGUARD MOPPING SYSTEM
HOW TO USE PUREGUARD MOPPING SYSTEM

1 Squeeze the metal frame together.

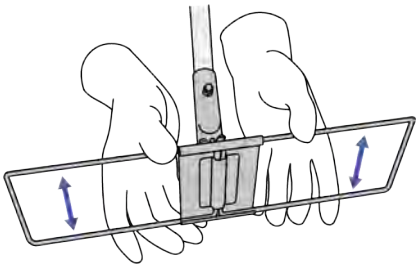

2 Push the two sides together.

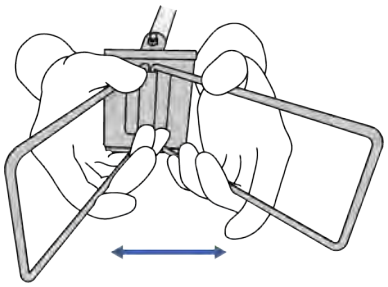

3 Put the mop frame into the mop dispenser on the front of the trolley.

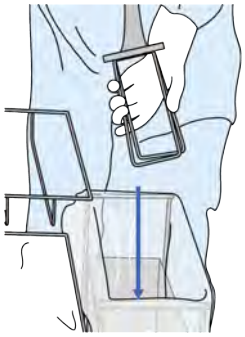

4 Push down onto the mop head so that the two sides of the frame separate towards the end pockets.

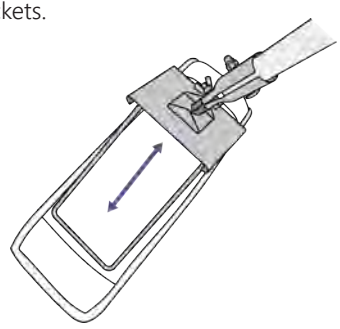

5 Push the frame into the pockets. Ensure that the mop frame clicks into place.

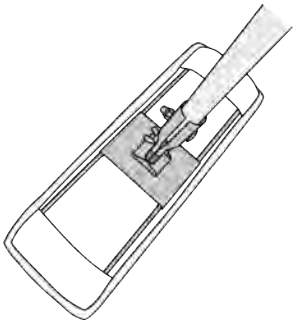

6 Mop the floor/walls in accordance with aseptic techniques. A single mop cleans up to 15m^2.

7 Once the mop is used, squeeze the frame as before over the net bag. Avoid touching the mop head.

8 Dispose of the mop into the bag. Repeat the process with your next mop. Dispose of the waste bag in accordance with local procedures.

PUREGUARD MOPPING SYSTEM
HOW TO MOP A CLEANROOM

The s-curve method

- Mop the two edges either side of your cleanroom area.
- To reduce contamination, avoid stepping on any cleaned areas.
- Mop across your cleanroom area using an s-shape. Keep lines as neat as possible.
- Overlap paths by 30%.

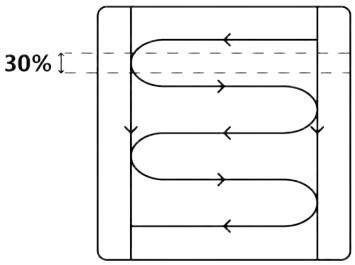

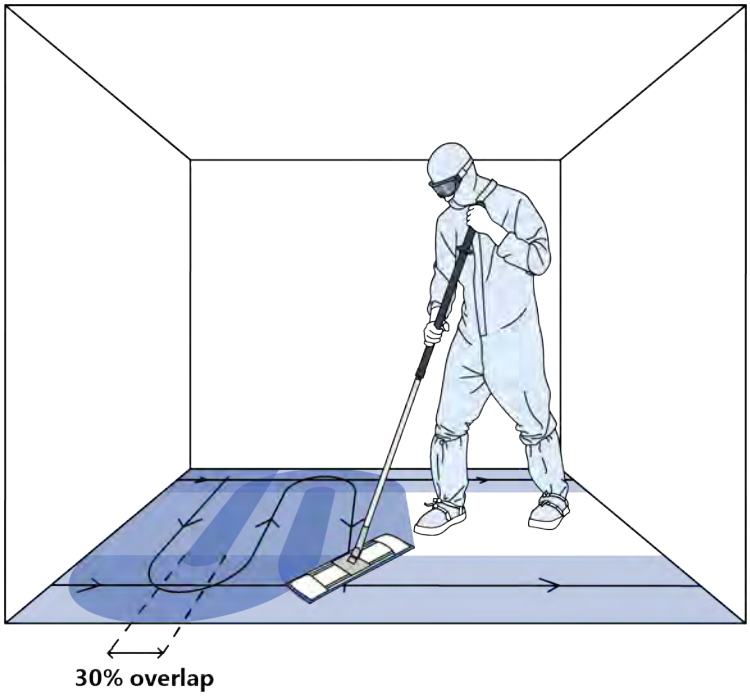

The lift and lay method

- Place your mop at the edge of your cleanroom area and mop across a straight line.
- Repeat the straight lines, ensuring paths overlap by 30%.
- To reduce contamination, avoid stepping on any cleaned areas.
- Finally mop along the edge of the room.

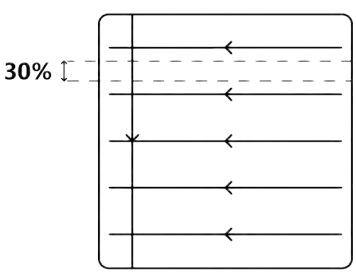

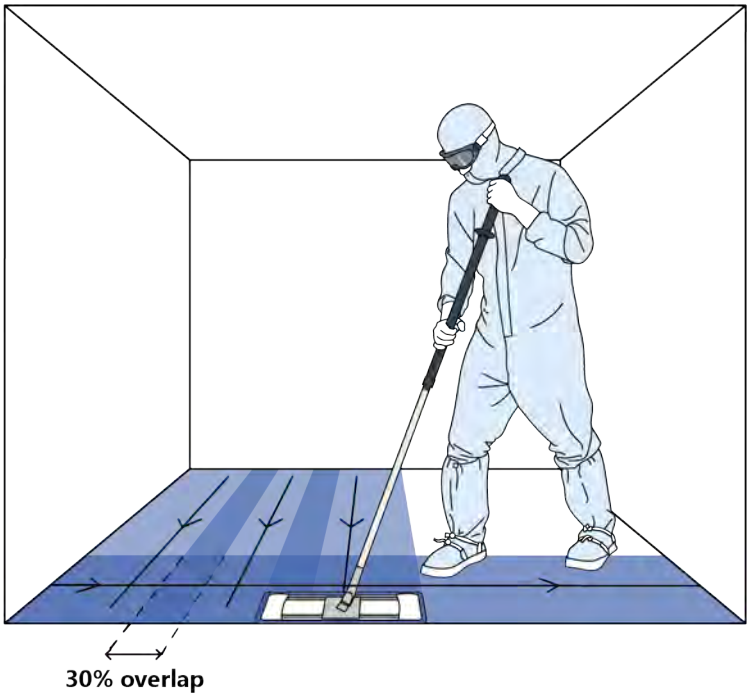

microncleanQUALITY TODAY - INNOVATION TOMORROW

Roman Bank / Skegness / Lincolnshire / PE25 1SQ / UK
T: +44 (0)1754 767 377
E: customer.services@microncleanco.uk
W: www.microncleancom

MPDMSUK 07/2020

Care has been taken to ensure that the contents of this publication are accurate, but Microncleanlimited, its subsidiaries and its partners do not accept responsibility or liability for errors or information that is found to be misleading.